Heizmann
Schlauchtechnik - Hydraulik - Antriebstechnik

H·POWER

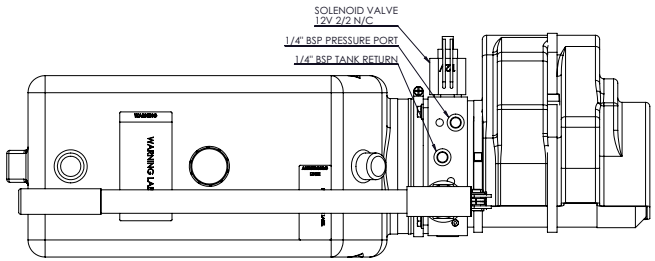


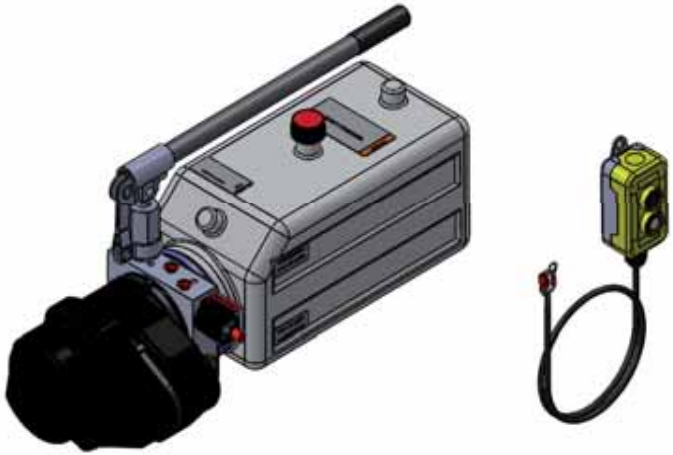

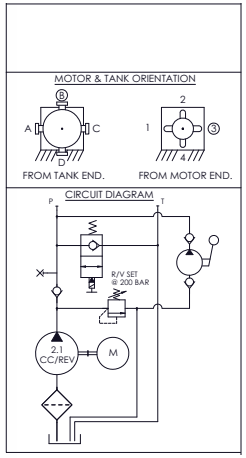


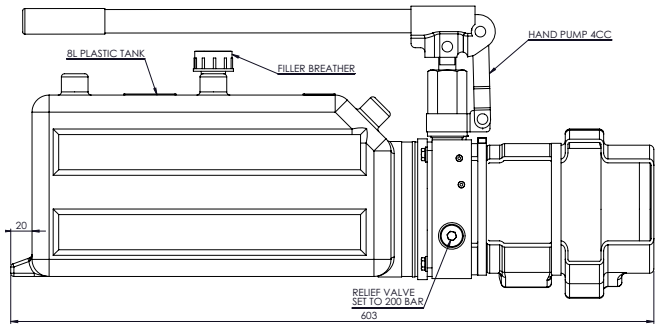


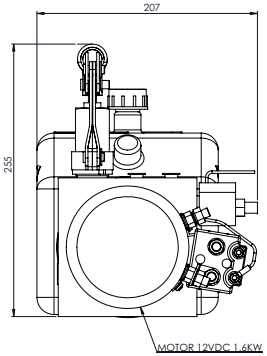

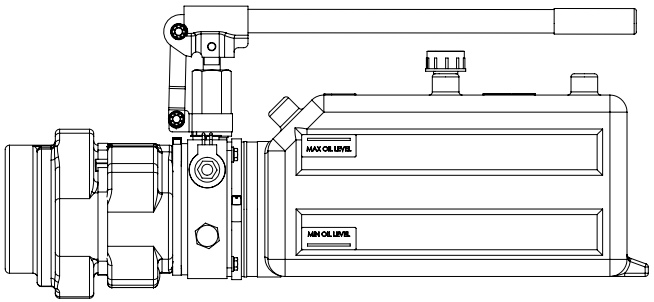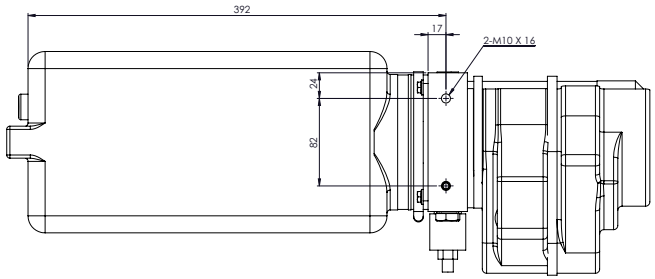
MOTOR COVER REMOVED
FOR CLARITY